Clarke®

PUMP



SUBMERSIBLE WATER PUMP

MODEL NO: PSP195B

PART NO: 7239252

OPERATION & MAINTENANCE INSTRUCTIONS

UK CA | CE

ORIGINAL INSTRUCTIONS

DL1026 Rev 1

INTRODUCTION

Thank you for purchasing this CLARKE Submersible Water Pump.

This pump is designed for pumping clean water or water containing solids in suspension with the ability to pump solid material in suspension however, the outlet elbow and delivery pipe diameter will restrict this. It is not designed for pumping slurry, sludge, mud or heavily polluted water, or any water containing chemicals or other acidic contaminants including salt water.

Pumps fitted with float switches are suitable for permanent or semi-permanent installations where it is necessary to maintain water at a particular level. As the water level rises, the float switch will rise and start the pump. As the water level falls, so will the float switch until it stops the pump. Float switches are factory set to provide the correct on/off switching mode, however, you can adjust the level at which the pump cuts out by sliding the float switch adjuster as required.

GUARANTEE

This product is guaranteed against faulty manufacture for a period of 12 months from the date of purchase. Please keep your receipt which will be required as proof of purchase.

This guarantee is invalid if the product is found to have been abused or tampered with in any way, or not used for the purpose for which it was intended.

Faulty goods should be returned to their place of purchase, no product can be returned to us without prior permission.

This guarantee does not effect your statutory rights.

ENVIRONMENTAL PROTECTION

By purchasing this product, the customer is taking on the obligation to deal with its safe disposal in accordance with the Waste Electrical and Electronic Equipment regulations (WEEE).

In effect, this means that this product must not be disposed of with general household waste. It must be disposed of according to the laws governing Waste Electrical and Electronic Equipment (WEEE) at a recognised disposal facility.

PRODUCT SPECIFICATIONS

SPECIFICATIONS	PSP195B
Outlet thread size	G 1½”
Outlet adaptor size	1” /1¼” /1½”
Operating voltage & frequency	230V ~ 50Hz
Motor Output	750 W
Input amperage (under load)	1.77 A
Ingress protection rating	IPX8
Insulation class	Class 1
Maximum Head	8.5 M
Maximum flow rate	13,000 L/hr
Maximum depth	7 M
Working pressure	0.85 bar
Operating temperature	0-35 deg C
Weight	4.8 kg
Cable length	10 M
Dimensions not including the elbow	235 x 165 x 300 mm
Lowest pump suction level	5 mm
Lowest pump starting level	60 mm

SAFETY PRECAUTIONS

1. This pump is designed to pump **WATER ONLY**. **NEVER** use for pumping flammable liquids or chemicals.
2. An approved Residual Current Device (RCD) which has a tripping current of less than 30mA must be used when pumping from ponds or swimming pools.
3. **NEVER** carry the pump by the mains lead.
4. **NEVER** pull the power lead to disconnect the pump from the power socket.
5. Your submersible pump may only be used for pumping water from a swimming pool when there is no person or animal in the pool.
6. **ALWAYS** disconnect the pump from the electrical supply before placing it into, or removing it from the water and before any cleaning or maintenance.
7. **ALWAYS** use the moulded handle with a rope or cable attached when lifting the pump. **NEVER** lift the pump by the mains cable.
8. **DO NOT** allow children to use or play with the pump /cables, or be involved with any cleaning or user maintenance.
9. Disconnect the pump from the power supply when not in use.
10. Have the pump repaired by a qualified person.
11. Keep the mains cable away from heat, oil and sharp edges.
12. **ALWAYS** check the plug, power cable for damage before use. **DO NOT** use if damaged. Refer to qualified service personnel for repair.
13. If you have to use an extension lead with this product, it must be designed for outdoor use and incorporate a cable suitable for use with Class I appliances.
14. The pump may be used by persons with reduced physical, sensory or mental capabilities, or lack of experience or knowledge if they have been given supervision or instruction concerning the use of the product in a safe way and if they understand the hazards involved.

ELECTRICAL CONNECTIONS

WARNING: READ THESE ELECTRICAL SAFETY INSTRUCTIONS THOROUGHLY BEFORE CONNECTING THE PRODUCT TO THE MAINS SUPPLY.

Before switching the product on, make sure that the voltage of your electricity supply is the same as that indicated on the rating plate. This product is designed to operate on 230VAC 50Hz. Connecting it to any other power source may cause damage.

This product may be fitted with a non-rewireable plug. If it is necessary to change the fuse in the plug, the fuse cover must be refitted. If the fuse cover becomes lost or damaged, the plug must not be used until a suitable replacement is obtained.

If the plug has to be changed because it is not suitable for your socket, or due to damage, it should be cut off and a replacement fitted, following the wiring instructions shown below. The old plug must be disposed of safely, as insertion into a mains socket could cause an electrical hazard.

If the colours of the wires in the power cable of this product do not correspond with the markings on the terminals of your plug, proceed as follows.

- The **Blue** wire must be connected to the terminal marked **N** or coloured **Black.**
- The **Brown** wire must be connected to the terminal marked **L** or coloured **Red.**
- The **Yellow and Green** wire must be connected to the terminal marked **E** or ⏚ or coloured **Green.**

Plug must be BS1363/A approved.

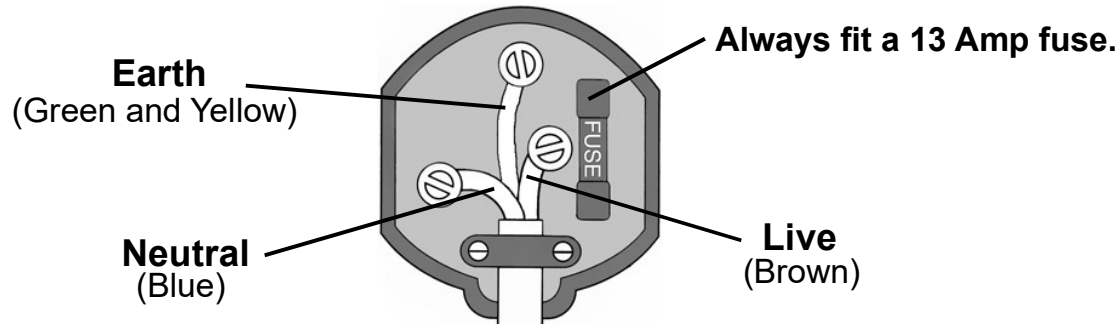

Ensure that the outer sheath of the cable is firmly held by the clamp

We strongly recommend that this machine is connected to the mains supply via a Residual Current Device (RCD). If in any doubt, consult a qualified electrician. **DO NOT** attempt any repairs yourself.

Parts & Service: 020 8988 7400 / E-mail: Parts@clarkeinternational.com or Service@clarkeinternational.com

PREPARATION

WARNING: DISCONNECT THE PUMP FROM THE POWER SUPPLY BEFORE CONNECTING THE HOSE ADAPTOR.

WARNING: THE WATER SEAL CONTAINS LUBRICANT WHICH IS NON-TOXIC BUT WHICH MAY ALTER THE CHARACTERISTICS OF THE WATER IN THE CASE OF PURE WATER, IF THE PUMP WERE TO DEVELOP ANY LEAKS

1. Remove all packaging and make sure that the pump has no visible damage. Dispose of all packaging appropriately.
   - The stepped hose adaptor supplied is designed to be used for either screw type hose connection or push fit.
2. Screw the adaptor to the threaded connection on the pump. Connect a suitable hose (not supplied) to the adaptor.
   - Suitable hoses are available from your local CLARKE dealer.
3. When push fitting the hose to the adaptor use a jubilee clip to secure it.
   - The multi hose adaptor is capable of accepting 25mm and 32mm hoses.
4. Attach a suitable hose using with a worm drive clip.

For maximum efficiency, we recommend that you use a 32mm diameter hose.



POSITIONING THE PUMP

WARNING: NEVER CARRY THE PUMP USING THE POWER CABLE. DAMAGE TO ELECTRICAL CABLES CAN BE HAZARDOUS. ALWAYS USE THE HANDLE WHEN MOVING THE PUMP.

1. The pump is completely submersible and should be placed in a vertical position on a solid flat surface, placing the pump on a couple of house bricks if required. Place the pump on a flat surface in the area that you want to drain.
2. **DO NOT** position the pump on sand or ground which is likely to shift.
   - If there is heavy sediment in the operating area, the pump should be placed on house bricks or similar.

Parts & Service: 020 8988 7400 / E-mail: Parts@clarkeinternational.com or Service@clarkeinternational.com

3. Ensure the pump is positioned with adequate space - recommended minimum base area of 20 x 20 cm and the maximum depth of any installation - 7 metres. The pump is supplied with 10 metres of power cable.
4. **ALWAYS** raise and lower the pump using the lifting handle and a rope attached to it if required. **NEVER** lift or lower the pump using the power cable.
    - The base inlet must be fully submerged before the pump is switched on and the pump is standing vertical.
5. Take all precautions as described on page 4 before switching on.
6. Connect the mains plug to the mains power supply.
7. Switch the mains power supply on.

OPERATING THE PUMP

1. **DO NOT** use the pump if there is any damage to the supply cable or to the float switch.
2. **NEVER** run the pump dry.
3. Switch the power supply on.
4. To operate the pump move the tab to the required position for either Auto or Manual mode.

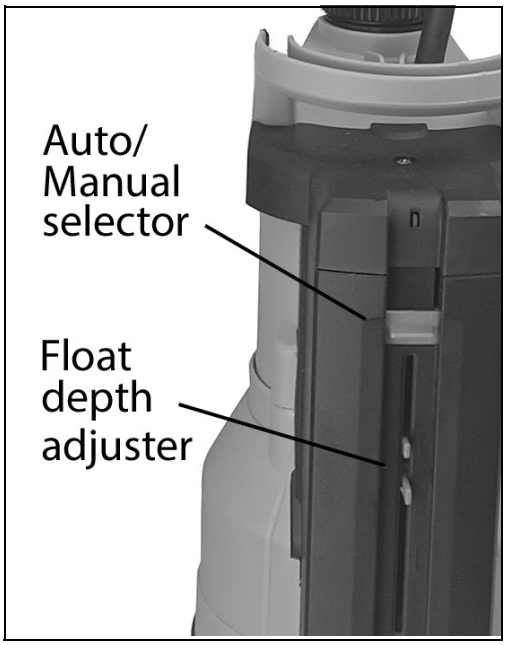

AUTOMATIC OPERATION (A)

To set the pump running automatically:

1. Move the selector tab to “A” (automatic).
    - When the float reaches the ON level the pump will start and will continue operating until the float drops to the OFF level.
    - The float switch automatically switches the pump ON when the water is above a pre-determined level set by moving the float depth adjuster.
    - As the water level falls, so will the float switch until it stops the pump.

MANUAL OPERATION (M)

To manually start the pump:

1. Lift the tab until the indicator is positioned on “M” (manual).
    - The pump will run indefinitely.

2. When the water level is down to 5 mm disconnect the pump from the power supply.

The depth of water to be pumped away can be adjusted by raising and lowering the tabs to which the float switch is attached.

3. **DO NOT** run the pump with the body exposed for more than a couple of minutes
4. Isolate the pump from the power supply when finished.
    - This pump is fitted with automatic thermal overload protection. If the pump overheats due to an obstruction in the pump or pumping warm water for example, it will shut off automatically. Isolate the pump from the power supply. Check for blockages and allow the motor to cool (at least 5 minutes) before attempting to re-start.
5. **DO NOT** use the pump if the water is liable to freeze as this can cause damage to the pump. Remove the pump from the water and store it in a frost free location.

AFTER USE

If the pump has been used with substances that tend to form a deposit, or with water containing chlorine, rinse it after use with a powerful jet of water in order to avoid the formation of deposits or encrustations which would reduce the pump's performance.

If the temperature is expected to be lower than 0°C, ensure there is no water remaining which could freeze and damage the pump.

MAINTENANCE

WARNING: BEFORE CHECKING THE CONDITION OF THE PUMP, ENSURE IT IS ISOLATED FROM THE POWER SUPPLY. IF THE UNIT IS HARD WIRED, ENSURE THE CIRCUIT BREAKER IS OPEN.

This pump should require no maintenance other than regular cleaning. If the pump starts to show signs of wear or damage, contact your CLARKE dealer for advice.

Check the pump regularly to ensure the water inlet is clear of leaves or other debris taking care to remove any debris from around the impeller. The bottom plate may be unscrewed and lifted off to assist in doing this.

Further cleaning may be required by back-flushing the pump with water pressure from a hose.

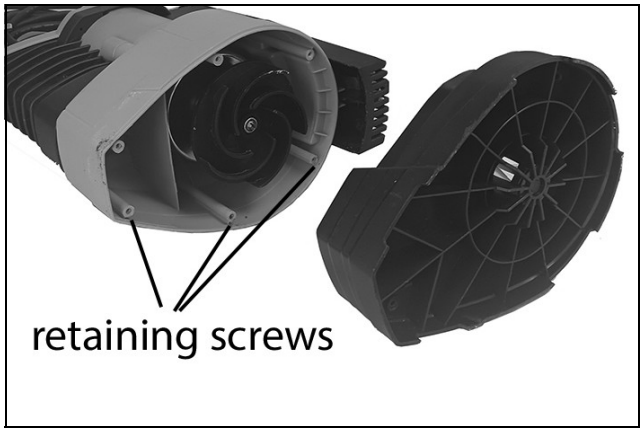

Parts & Service: 020 8988 7400 / E-mail: Parts@clarkeinternational.com or Service@clarkeinternational.com

DO NOT attempt to repair internal components the pump yourself as you may damage the waterproof seal and invalidate your guarantee. Repairs must be carried out by your CLARKE dealer or contact the CLARKE Service Department on 020 8988 7400.

If the troubleshooting on page 10 does not solve your problem, please contact the CLARKE service department.

USEFUL ACCESSORIES FROM THE CLARKE CATALOGUE

Hoses	Hose Clips
	
• Available in 100 metre coils or per meter.	• Zinc plated for corrosion resistance.

Hoses, clips and other items are available from your CLARKE dealer.

TROUBLESHOOTING

PROBLEM	SOLUTION
PUMP WILL NOT START	1. Check to ensure power is switched on. 2. Check fuse (consult an electrician if in doubt). 3. If extension lead is fitted, check connections (consult an electrician if in doubt). 4. Internal thermal cut-out has not re-set. Leave for 5 minutes and try again. 5. The impeller may be jammed. Disconnect from the power supply, remove the bottom plate and remove any objects that may be obstructing the impeller. Replace the bottom plate and try again. 6. Float switch may be jammed due to contamination and prevented from moving. 7. Water level too low - float switch in OFF position - lift float to check switch. 8. If the pump still fails to start, consult your CLARKE dealer.
PUMP WILL START BUT NOT PUMP	1. Check to ensure water entry is not blocked. 2. Discharge pathway clogged or obstructed. 3. The head may be too great, i.e. you are trying to lift the water too great a distance for the pump to cope with. (See specification page 2). 4. Air bubble in the pump, produced during the plunge. Plunge the pump again, at an angle and shake it whilst lowering to remove any air trapped in the system. 5. The impeller may be damaged - Consult your CLARKE dealer.
PUMP DOES NOT STOP	1. Float switch may be prevented from moving to the fully down position. 2. Float switch may be faulty. Consult your CLARKE dealer.
PUMP STOPS RUNNING	1. Thermal overload has operated. If this condition persists, investigate the cause. You may be attempting to pump liquid which is too heavy for the pump (mud, slurry etc.) 2. Pump has run dry or float switch has cut in. 3. A foreign object has jammed the impeller.

Parts & Service: 020 8988 7400 / E-mail: Parts@clarkeinternational.com or Service@clarkeinternational.com

COMPONENT PARTS

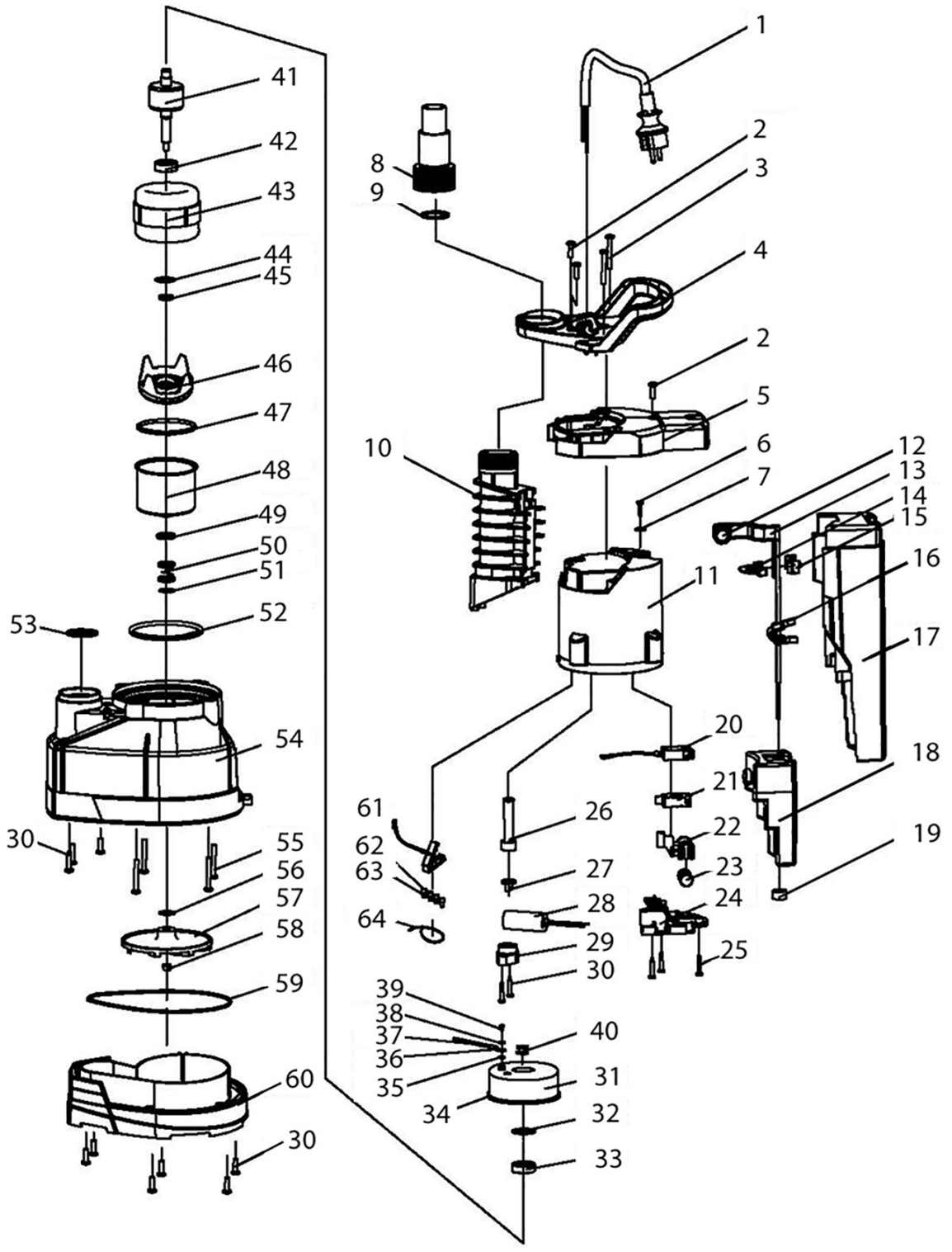

Parts & Service: 020 8988 7400 / E-mail: Parts@clarkeinternational.com or Service@clarkeinternational.com

COMPONENT PARTS

1	Power cable
2	X head s/t screw
3	X head s/t screw
4	Handle
5	Cover plate
6	Custom s/t screw
7	O-ring
8	Output connector
9	O-ring
10	Output connector
11	Rear pump housing
12	Magnet
13	Guide rod
14	Block
15	Slide block
16	Slide block
17	Protective guard
18	Floating ball assembly
19	Rubber ring
20	Rack earth part
21	Micro-switch
22	Handle support
23	Magnet
24	Block
25	Custom s/t screw
26	Cable sheath
27	Cable retainer
28	Capacitor
29	Cable clamp
30	X head s/t screw
31	Back cover
32	Gasket
33	Bearing

34	Clamping ring
35	Spring washer
36	Connector
37	Conducting wire
38	Serrated lock-washer
39	X head s/t screw
40	Wire bushing
41	Rotor
42	Bearing
43	Stator
44	Seal
45	Sealing ring
46	Front bushing
47	O-ring
48	Cover
49	Sealing ring
50	Mechanical seal
51	Shaft retaining ring
52	O-ring
53	O-ring
54	Main pump housing
55	Screw
56	Adjusting gasket
57	Impeller
58	Nut
59	O-ring
60	Pump base
61	Rack earth welding
62	Nylon pressing cap
63	Nylon pressing cap
64	Tie

PUMP PERFORMANCE

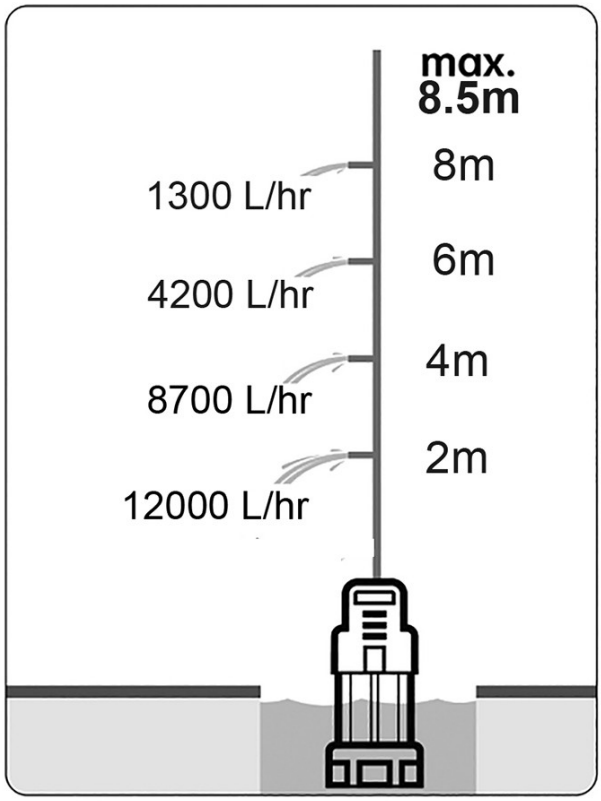

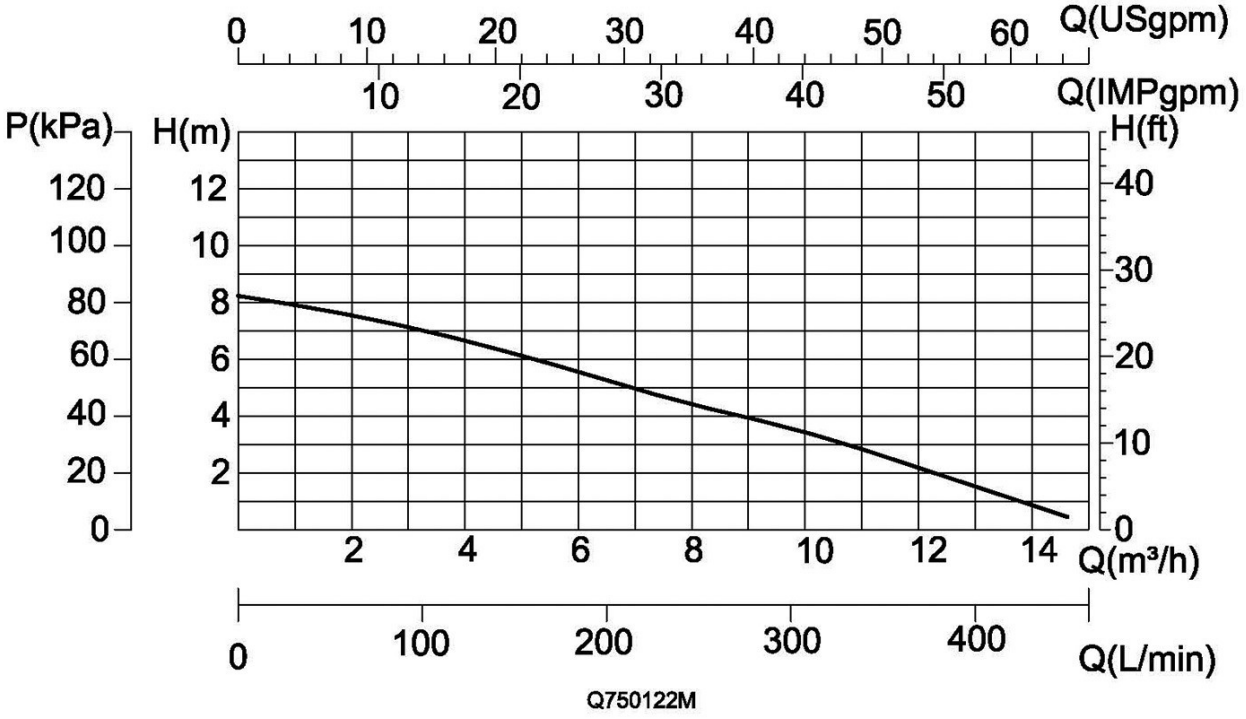

Parts & Service: 020 8988 7400 / E-mail: Parts@clarkeinternational.com or Service@clarkeinternational.com

DECLARATIONS OF CONFORMITY - UK

UK CA

Clarke® INTERNATIONAL

Hemnall Street, Epping, Essex, CM16 4LG

DECLARATION OF CONFORMITY

This is an important document and should be retained.

We hereby declare that this product(s) complies with the following legislation:

2014/30/EU	*Electromagnetic Compatibility Directive*
2006/42/EC	*Machinery Directive*
2011/65/EU	*Restriction of Hazardous Substances (RoHS) Directive*

The following standards have been applied to the product(s):

EN 60335-1:2012+A11+A13+A1+A14+A2+A15, EN IEC 60335-2-41:2021+A11, IEC 62321-3-1:2013, IEC 62321-4:2013+A1:2017, EN IEC 61000-3-2:2019+A1, EN IEC 55014-1:2021, IEC 62321-1:2013, IEC 62321-7-1:2015, IEC 62321-7-2:2017, IEC 62321-2:2021, IEC 62321-5:2013, IEC 62321-6:2015, EN 61000-3-3:2013+A1+A2, EN IEC 55014-2:2021, IEC 62321-12:2023, IEC 62321-8:2017, EN 62233:2008,

The technical documentation required to demonstrate that the product(s) meet(s) the requirement(s) of the aforementioned legislation has been compiled and is available for inspection by the relevant enforcement authorities.

The UKCA mark was first applied in: 2026

Product Description:	Submersible Pump
Model Number(s):	PSP195B
Serial/Batch Number:	Refer to product/packaging label
Date of Issue:	25/03/2026

Signed:

.....

J.A Clarke

Director

PSP195B UKCA Clarke DOC 032526

Page 1 of 1

Parts & Service: 020 8988 7400 / E-mail: Parts@clarkeinternational.com or Service@clarkeinternational.com

DECLARATIONS OF CONFORMITY-CE

CE

Clarke®
INTERNATIONAL

Fitzwilliam Hall, Fitzwilliam Place, Dublin 2

DECLARATION OF CONFORMITY

This is an important document and should be retained.

We hereby declare that this product(s) complies with the following legislation:

2014/30/EU	*Electromagnetic Compatibility Directive*
2006/42/EC	*Machinery Directive*
2011/65/EU	*Restriction of Hazardous Substances (RoHS) Directive*

The following standards have been applied to the product(s):

EN 60335-1:2012+A11+A13+A1+A14+A2+A15, EN IEC 60335-2-41:2021+A11, IEC 62321-3-1:2013, IEC 62321-4:2013+A1:2017, EN IEC 61000-3-2:2019+A1, EN IEC 55014-1:2021, IEC 62321-1:2013, IEC 62321-7-1:2015, IEC 62321-7-2:2017, IEC 62321-2:2021, IEC 62321-5:2013, IEC 62321-6:2015, EN 61000-3-3:2013+A1+A2, EN IEC 55014-2:2021, IEC 62321-12:2023, IEC 62321-8:2017, EN 62233:2008,

The technical documentation required to demonstrate that the product(s) meet(s) the requirement(s) of the aforementioned legislation has been compiled and is available for inspection by the relevant enforcement authorities.

The CE mark was first applied in: 2026

Product Description:	Submersible Pump
Model Number(s):	PSP195B
Serial/Batch Number:	Refer to product/packaging label
Date of Issue:	25/03/2026

Signed: .....

J.A Clarke

Director

PSP195B CE Clarke DOC 032526

Page 1 of 1

Parts & Service: 020 8988 7400 / E-mail: Parts@clarkeinternational.com or Service@clarkeinternational.com

A SELECTION FROM THE VAST RANGE OF

Clarke®

QUALITY PRODUCTS













AIR COMPRESSORS
From DIY to industrial, Plus air tools, spray guns and accessories.

GENERATORS
Prime duty or emergency standby for business, home and leisure.

POWER WASHERS
Hot and cold, electric and engine driven - we have what you need

WELDERS
Mig, Arc, Tig and Spot.
From DIY to auto/industrial.

METALWORKING
Drills, grinders and saws for DIY and professional use.

WOODWORKING
Saws, sanders, lathes, mortisers and dust extraction.

HYDRAULICS
Cranes, body repair kits, transmission jacks for all types of workshop use.

WATER PUMPS
Submersible, electric and engine driven for DIY, agriculture and industry.

POWER TOOLS
Angle grinders, cordless drill sets, saws and sanders.

STARTERS/CHARGERS
All sizes for car and commercial use.

PARTS & SERVICE:
0208 988 7400

Parts Enquiries
Parts@clarkeinternational.com

Servicing & Technical Enquiries
Service@clarkeinternational.com

SALES: UK 01992 565333 or Export 00 44 (0)1992 565335

Clarke® INTERNATIONAL Hemnall Street, Epping, Essex CM16 4LG
www.clarkeinternational.com